Itrón

Delta

Commercial & Industrial Rotary Meter

Itron's Delta range of rotary gas meters comprises innovative and high quality products. Characterized by compact dimensions and easy maintenance, the Delta range is built on proven robust technology and provides reliable and accurate measurement and performance for commercial and industrial natural gas applications.

KEY BENEFITS

- Excellent metrological stability attested by customers over the years
- No influence of installation conditions nor stop-and-go flow rate on the metrology
- Optimised pressure loss for low pressure network
- Multi-position meter, changeable on the field
- 360° rotating totalizer
- Cyble technology

Operating Principle

Delta meters are volumetric meters. The flow gas moves the pistons and each rotation traps and transfers a specific volume of gas. The movement is mechanically transmitted to the totaliser through the magnetic coupling.

Description

A Delta meter is made of 5 main parts:

- A measuring chamber that is limited by the body and the 2 base plates (1)
- 2 pistons, which are synchronised by 2 gears and which rotate in opposite directions (2)
- lubrificant cover (3)
- A magnetic coupling to transmit the movement of the pistons to the totaliser (4)
- A totaliser to register the measured gas (5)

Technical Specifications

Flow rate	From 0.25 m^3/h to 1000 m^3/h, G10 to G650
Nominal Diameters	DN 25 to DN 150 (1" to 6")
Maximum Working Pressure	Up to 100 bar depending on the body material and flanging
Body Materials	Aluminium, ductile iron or steel. Compliant with the Pressure Equipment Directive 2014/68/EU
Temperature Range	ATEX/PED: -30° C to +60° C MID: -25° C to +55° C Storage temperature: -40° C to +70° C
Metrology	In accordance with MID and OIML, large rangeability up to 1:200. Compliant with the Measuring Instrument Directive 2014/32/EU
Intrinsic Safety Approval	L.C.I.E. 06 ATEX 6031 X - Compliant with the Directive 2014/34/EU

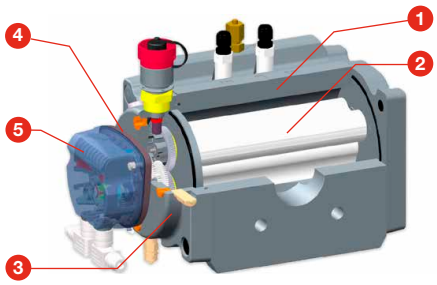

APPLICATIONS

Delta meters are designed to measure natural gas and various filtered, and non-corrosive gases. They are used when very accurate measurement is required, when the gas flow can be low or irregular.

Due to the volumetric principle of the Delta meter, its metrology is not influenced by installation conditions. Consequently, it can be used to build very compact stations without installing a straight pipe inlet before the meter.

Delta meters are approved for fiscal use.

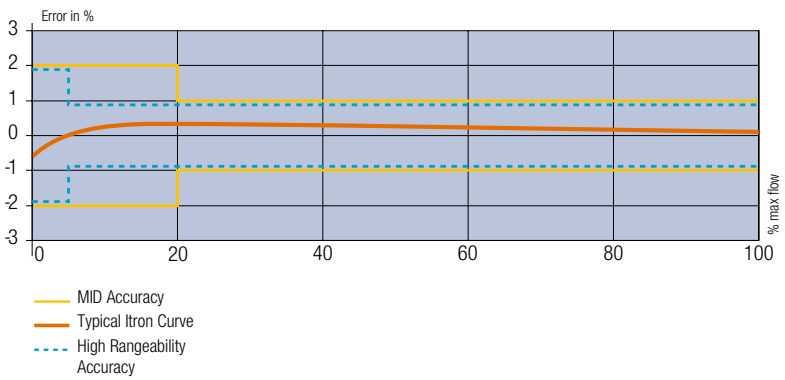

Totaliser:

- 9-digit index to register a larger volume
- 45° orientation for an easy reading
- 360°rotating totalizer
- Equipped as standard with the cyble target: it allows the installation of the cyble sensor at any time
- Equipped with 1 built-in silicagel cartridge; as an option, equipped with an external cartridge to enable easy maintenance even in extreme conditions
- Integrated optical disc to facilitate the periodic calibration of the meter
- Customised name plate (logo, bar-code, customer serial number…)
- IP67 protection
- UV resistant
- Unit: m^3

Interfaces:

- Double Low Frequency fitted as standard on the whole range
- Anti-tampering is supplied as standard
- Medium Frequency is supplied as an option on the DN50 to DN150
- High Frequency is supplied as an option on the whole range
- Mechanical drive according to EN 12480 is supplied as an option
- The cyble sensor can be delivered mounted onto the meter or installed afterwards at any time.
  It is a bounce-free transmitter. It allows also the counting of eventual back flows

Universal totaliser fitted as standard with the Cyble target

Cyble module ATEX

Low Frequency pulse transmitters (LF):

The LF transmitter consists of 2 dry Reed switches, normally open, and controlled by a magnet situated in the first drum of the totaliser. The LF connections are without polarity.

1) Internal Reed contacts

- Hermetically sealed contacts

2) Cyble sensor

- It conforms to CENELEC standard EN 60079-11

Anti-tampering transmitter (AT):

This consists of one dry Reed switch, normally closed. Attempts at magnetic tampering will open the contact. The electrical characteristics are the same as those for the LF transmitter.

Inductive transmitters (HF and MF):

They are inductive sensors actuated by a toothed disc. The frequency is proportional to the instantaneous flow. The polarity of the connections is indicated on the name plate of the meter.

1) High Frequency transmitter

- Proximity detectors conform to EN 60947-5-6 (NAMUR) standards.
- They conform to CENELEC standards (EN 60079-0 and EN 60079-11)

2) Medium Frequency transmitter

- It conforms to CENELEC standards (EN 60079-0 and EN 60079-11)

LF plug

HF plug

Mechanical drive according to EN 12480

ALUMINIUM SERIES

DELTA SILVER EDITION

The Delta Silver Edition range combines Itron's proven Delta range with an eco-friendly design resulting in a lighter, smaller and easy to maintain product.

Delta Silver Edition range

Main Characteristics

- Only the front cover must be filled with a lubricant.
- Thermowells: supplied as an option.
- Double Low Frequency transmitter connected on a Binder 6 pins plug. Anti-tampering is supplied as a standard.
- MF is supplied as an option.
- HF is supplied as an option, connected on a 3 pin binder. Possible to be retrofitted.

Technical Features

Flow rate	0.4 m³/h to 250 m³/h
G size	G16, G25, G40, G65 G100 and G160
Rangeability	1:20 to 1:200
Nominal diameter	50 and 80 (2" and 3")
Flanging	PN 10/16 and Class 150 (125)
Pressure range	19.3 bar

DN50/DN80 :

G size	Qmax (m³/h)	DN	Flange to flange distance Dim.: L	Rangea-bility	Pressure loss Δpr[1] (mbar)	1 Imp LF& Cyble (m³/Imp)	1 Imp MF (dm³/Imp)	Freq MF at Qmax (Hz)	1 Imp HF (dm³/Imp) (Std. Gears 32/40)	Freq HF at Qmax (Hz)	A	B	C	D	Vc (dm³)	Weight (Kg)
G16	25	50	171	20 to 50	0.14	0.1	2.72	2.55	0.0583	119	172	87	259	182	0.59	9
G25	40	50	171	20 to 100	0.28	0.1	2.72	4.08	0.0583	191	172	87	259	182	0.59	9
G40	65	50	171	20 to 160	1.10	0.1	2.72	6.64	0.0583	310	172	87	259	182	0.59	9
G65	100	50	171	20 to 200	2.07	0.1	2.72	10.2	0.0583	476	172	87	259	182	0.59	9
G65	100	80	171	20 to 200	1.03	0.1	4.36	6.36	0.0935	297	210	125	335	182	0.94	13
G100	160	50	171	20 to 200	3.03	0.1	4.36	10.2	0.0935	475	210	125	335	182	0.94	13
G100	160	80	171	20 to 200	2.76	0.1	4.36	10.2	0.0935	475	210	125	335	182	0.94	13
G160	250	80	171	20 to 200	3.45	0.1	5.28	13.2	0.113	614	234	149	383	182	1.16	15

[1]Δpr: Pressure loss (mbar) with ρ = 0.83Kg/m³ and at Qmax

Delta Silver DN50 G40

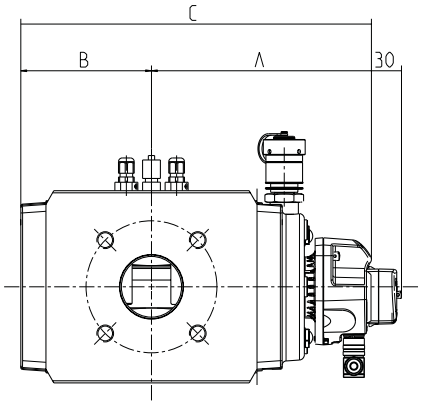

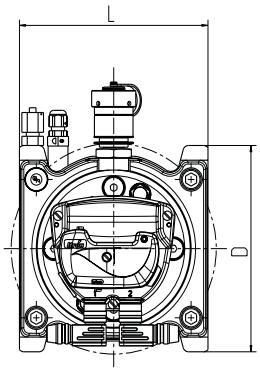

The Itron meter is ideal for installation in extremely small cabinets.

Main Characteristics

- Available in thread version (L=121mm) or flanged version (L=171mm).
- Only the front cover has to be filled with lubricant.
- Thermowell: supplied as an option.
- Double Low Frequency transmitter connected on a Binder 6 pins plug. Anti-tampering is supplied as a standard.
- HF is supplied as an option, connected on a Binder 6 pins plug.

Technical Features

Flow rate	0.25 m³/h to 65 m³/h
G size	G10, G16, G25 and G40
Rangeability	1:20 to 1:200
Threaded version	DN40 1½" BSP or NPT
Flanged version	DN25, DN40 and DN50
	(1", 1½", 2")
	ISO PN10/16
	Class 150 (125)
Pressure range	Up to 19.3 bar

Threaded version DN40 :

G size	Qmax (m³/h)	DN	Flange to flange distance Dim.: L	Rangea-bility	Pressure loss Δpr(1) (mbar)	1 Imp LF (m³/Imp)	1 Imp HF (dm³/Imp) (Std. Gears 32/40)	Freq HF at Qmax (Hz)	A	B	C	D	Vc (dm³)	Weight (Kg)
G10	16	40	121	20 to 50	0.48	0.01	0.218	20.4	126	46	172	126	0.19	4
G16	25	40	121	20 to 100	1.03	0.01	0.218	31.8	126	46	172	126	0.19	4
G25	40	40	121	20 to 160	1.93	0.01	0.218	50.9	126	46	172	126	0.19	4
G40	65	40	121	20 to 200	4.82	0.01	0.218	82.8	126	46	172	126	0.19	4

Flanged version DN25/DN40/DN50 :

G size	Qmax (m³/h)	DN	Flange to flange distance Dim.: L	Rangea-bility	Pressure loss Δpr(1) (mbar)	1 Imp LF (m³/Imp)	1 Imp HF (dm³/Imp) (Std. Gears 32/40)	Freq HF at Qmax (Hz)	A	B	C	D	Vc (dm³)	Weight (Kg)
G10	16	25	171	20 to 50	1.38	0.01	0.218	20.4	126	60	186	126	0.19	6
G10	16	40	171	20 to 50	0.48	0.01	0.218	20.4	126	60	186	126	0.19	6
G10	16	50	171	20 to 50	0.55	0.01	0.218	20.4	126	60	186	126	0.19	6
G16	25	25	171	20 to 100	3.10	0.01	0.218	31.8	126	60	186	126	0.19	6
G16	25	40	171	20 to 100	1.03	0.01	0.218	31.8	126	60	186	126	0.19	6
G16	25	50	171	20 to 100	1.03	0.01	0.218	31.8	126	60	186	126	0.19	6
G25	40	40	171	20 to 160	1.93	0.01	0.218	50.9	126	60	186	126	0.19	6
G25	40	50	171	20 to 160	1.93	0.01	0.218	50.9	126	60	186	126	0.19	6
G40	65	40	171	20 to 200	4.82	0.01	0.218	82.8	126	60	186	126	0.19	6
G40	65	50	171	20 to 200	4.82	0.01	0.218	82.8	126	60	186	126	0.19	6

(1)Δpr: Pressure loss (mbar) with ρ = 0.83Kg/m³ and at Qmax

Delta DN40 G16

Delta DN50 G40 fitted with Cyble sensor

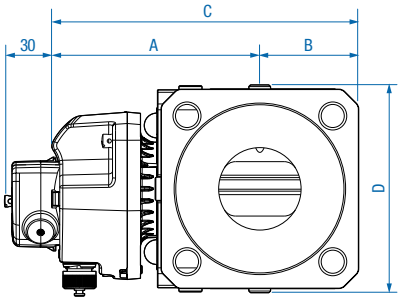

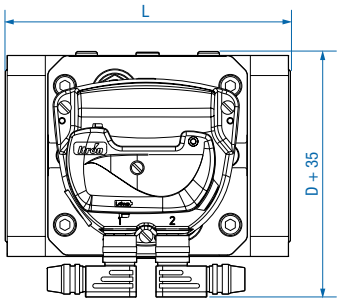

DELTA 2080/2100

Completing the whole aluminium series, this meter is design to measure big flow rates achieving a good compromise between that characteristic and its size.

Main Characteristics

- Both front and rear covers must be filled with a lubricant.
- Thermowells: supplied as an option.
- Double Low Frequency transmitter connected on a Binder 6 pins plug. Anti-tampering is supplied as a standard.
- MF is supplied as an option.
- HF is supplied as an option, connected on a 3 pin binder.

Technical Features

Flow rate	1.5 m^3/h to 650 m^3/h
G size	G160, G250 and G400
Rangeability	1:20 to 1:200
Nominal diameter	80 and 100 (3" and 4")
Flanging	PN 10/16 and Class 150 (125)
Pressure range	16 bar (Option: 19.3 bar)

DN80/DN100 :

G size	Qmax (m^3/h)	DN	Flange to flange distance Dim.: L	Rangea-bility	Pressure loss Δpr[1] (mbar)	1 Imp LF & Cyble (m^3/Imp)	1 Imp MF (dm^3/Imp)	Freq MF at Qmax (Hz)	1 Imp HF (dm^3/Imp) (Std. Gears 32/40)	Freq HF at Qmax (Hz)	A	B	C	D	Vc (dm^3)	Weight (Kg)
G160	250	80	241	20 to 160	2.75	0.1	8.26	8.41	0.178	390	230	179	409	235	1.78	29
G160	300	100	241	20 to 160	1.93	1	21.8	3.82	0.241	346	265	213	478	235	2.41	34
G250	400	80	241	20 to 130	4.41	1	21.8	5.09	0.241	456	265	213	478	235	2.41	34
G250	400	100	241	20 to 130	3.24	1	21.8	5.09	0.241	456	265	213	478	235	2.41	34
G250	400	100	241	20 to 160	3.03	1	32.6	3.40	0.365	304	333	282	615	235	3.65	43
G400	650	100	241	20 to 160	4.97	1	32.6	5.53	0.365	496	333	282	615	235	3.65	43

[1]Δpr: Pressure loss (mbar) with ρ = 0.83Kg/m^3 and at Qmax

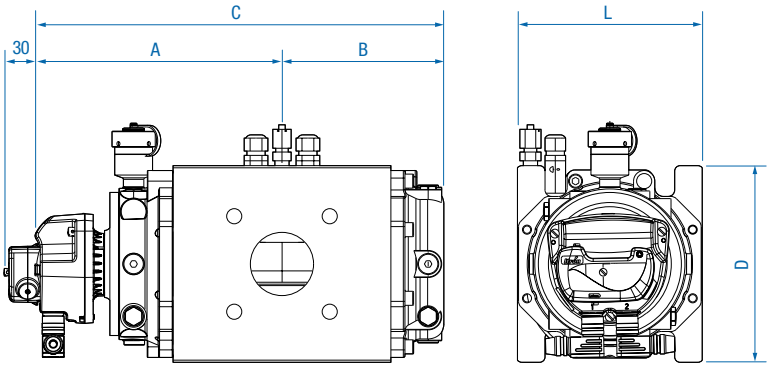

Delta DN100 G250 equipped with HF and Cyble sensor

DELTA REFERENCE METER

In this meter, the classic pistons are replaced by 3-lobe and 60 °twisted pistons, eliminating the normal pulsations and resonance of the conventional rotary meter.
Developed to attend the highest requirements in terms of accuracy, stability and noise level, Delta reference meter is ideal for Metrology Institutes.

Main Characteristics

- S-flow technology.
- Only front cover must be filled with lubricant.
- Thermowells: supplied as an option.
- Double Low Frequency transmitter connected on a Binder 6 pins plug and Anti-tampering are supplied as a standard.
- MF is supplied as an option.
- HF is supplied as an option, connected on a Binder 3 pin plug.

Technical Features

Flow rate	1 m³/h to 160 m³/h
G size	G16, G25, G40, G65 and G100
Rangeability	1:20 to 1:160
Nominal diameter	50 (2")
Flanging	PN 10/16 and Class 150 (125)
Pressure range	16 bar

DN50 :

G size	Qmax (m³/h)	DN	Flange to flange distance Dim.: L	Rangea-bility	Pressure loss Δpr[1] (mbar)	1 Imp LF & Cyble (m³/Imp)	1 Imp MF (dm³/Imp)	Freq MF at Qmax (Hz)	1 Imp HF (dm³/Imp) (Std. Gears 32/40)	Freq HF at Qmax (Hz)	A	B	C	D	Vc (dm³)	Weight (Kg)
G16	25	50	171	20 to 30	0.21	0.1	2.31	3.01	0.0496	140	172	87	259	182	0.49	10
G25	40	50	171	20 to 65	0.44	0.1	2.31	4.81	0.0496	224	172	87	259	182	0,49	10
G40	65	50	171	20 to 100	1.08	0.1	2.31	7.82	0.0496	364	172	87	259	182	0.49	10
G65	100	50	171	20 to 160	1.90	0.1	2.31	12.0	0.0496	560	172	87	259	182	0.49	10
G100	160	50	171	20 to 200	3.88	0.1	2.31	19.3	0.0496	896	172	87	259	182	0.49	10

[1]Δpr: Pressure loss (mbar) with ρ = 0.83Kg/m³ and at Qmax

Delta reference meter
Cut view

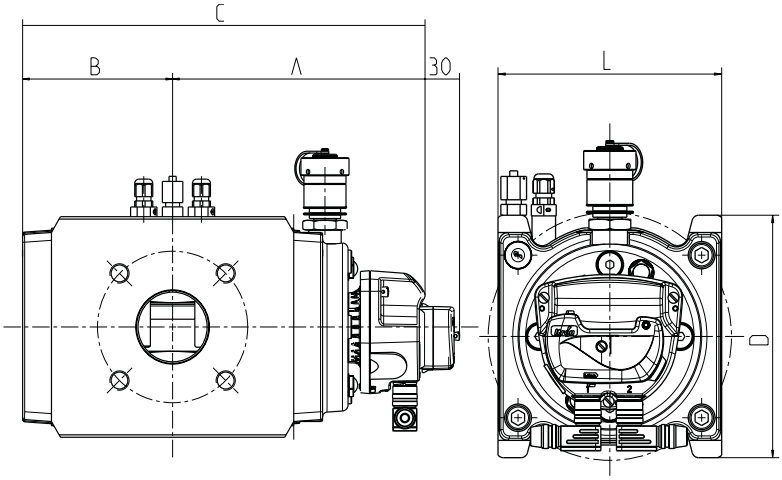

DUCTILE IRON SERIES

DELTA Evo

The Delta Evo range combines Itron's proven Delta range with an eco-friendly resulting in a smaller and easy to maintain product.
The meters are designed to support high temperatures without impact on both safety and metrology.
Due to the 3xDN flange to flange distance dimension, the replacement of turbine meters is possible without modifying the installation.

Main Characteristics

- Only the front cover must be filled with a lubricant.
- Thermowells: supplied as an option.
- Double Low Frequency transmitter connected on a Binder 6 pins plug. Anti-tampering is supplied as a standard.
- MF is supplied as an option.
- HF is supplied as an option, connected on a 3 pin binder. Possible to be retrofitted.
- High Temperature Loading: fire resistant PN5 is supplied as an option. Not offered along with HF.

Technical Features

Flow rate	0.4 m³/h to 250 m³/h
G size	G16, G25, G40, G65, G100, G160
Rangeability	1:20 to 1:200
Nominal diameter	50, 80, and 100 (2", 3", and 4")
Flanging	PN 10/16 and Class 150 (125)
Pressure range	19.3 bar

DN50/DN80/DN100 :

G size	Qmax (m³/h)	DN	Flange to flange distance Dim.: L	Rangea-bility	Pressure loss Δpr[1] (mbar)	1 Imp LF & Cyble (m³/Imp)	1 Imp MF (dm³/Imp)	Freq MF at Qmax (Hz)	1 Imp HF (dm³/Imp) (Std. Gears 32/40)	Freq HF at Qmax (Hz)	A	B	C	D	Vc (dm³)	Weight (Kg)
G16	25	50	150	20 to 50	0.07	0.1	4.36	1.59	0.0935	74	210	125	335	162	0.94	23
G16	25	50	171	20 to 50	0.14	0.1	2.72	2.55	0.0583	119	172	87	259	162	0.59	19
G25	40	50	150	20 to 100	0.21	0.1	4.36	2.55	0.0935	119	210	125	335	162	0.94	23
G25	40	50	171	20 to 100	0.28	0.1	2.72	4.08	0.0583	191	172	87	259	162	0.59	19
G40	65	50	150	20 to 160	0.48	0.1	4.36	4.14	0.0935	193	210	125	335	162	0.94	23
G40	65	50	171	20 to 160	1.10	0.1	2.72	6.64	0.0583	310	172	87	259	162	0.59	19
G65	100	50	150	20 to 200	2.07	0.1	4.36	6.36	0.0935	297	210	125	335	162	0.94	23
G65	100	50	171	20 to 200	1.24	0.1	2.72	10.2	0.0583	476	172	87	259	162	0.59	19
G65	100	80	171	20 to 200	1.03	0.1	4.36	6.36	0.0935	297	210	125	335	180	0.94	26
G65	100	80	230	20 to 80	0.55	0.1	5.27	5.26	0.1131	246	234	149	383	218	1.16	35
G65	100	80	240	20 to 200	1.03	0.1	4.36	6.36	0.0935	297	210	125	335	188	0.94	31
G100	160	50	150	20 to 200	3.03	0.1	4.36	10.2	0.0935	475	210	125	335	162	0.94	23
G100	160	80	171	20 to 200	2.76	0.1	4.36	10.2	0.0935	475	210	125	335	180	0.94	26
G100	160	80	230	20 to 130	1.45	0.1	5.27	8.42	0.1131	393	234	149	383	218	1.16	35
G100	160	80	240	20 to 200	2.76	0.1	4.36	10.2	0.0935	475	210	125	335	188	0.94	31
G100	160	100	241	20 to 130	0.97	0.1	5.27	8.42	0.1131	393	234	149	383	218	1.16	35
G160	250	80	230	20 to 200	3.45	0.1	5.28	13.2	0.1131	614	234	149	383	218	1.16	35
G160	250	100	230	20 to 200	2.28	0.1	5.28	13.2	0.1131	614	234	149	383	218	1.16	35
G160	250	100	241	20 to 200	2.28	0.1	5.28	13.2	0.1131	614	234	149	383	218	1.16	35

[1] Δpr: Pressure loss (mbar) with ρ = 0.83Kg/m³ and at Qmax

Delta EVO G100 DN80 171mm

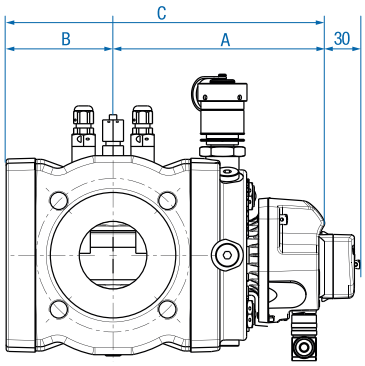

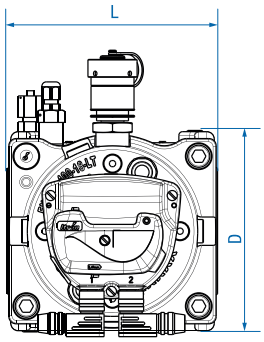

DELTA 2080/2100 & S3-FLOW

S3-FLOW is built up with s-flow technology to meet the highest requirements in accuracy measurement, being ideal to be used as a reference meter.

Main Characteristics

- Both front and rear covers must be filled with a lubricant.
- Thermowells: supplied as an option.
- Double Low Frequency transmitter connected on a Binder 6 pins plug. Anti-tampering is supplied as a standard.
- MF is supplied as an option.
- HF is supplied as an option, connected on a 3 pin binder.
- High Temperature Loading: fire resistant PN5 is supplied as an option. Not offered along with HF.

Technical Features

Flow rate	1.6 m³/h to 1000 m³/h
G size	G160, G250, G400, G650
Rangeability	1:20 to 1:200
Nominal diameter	80, 100 and 150 (3", 4" and 6")
Flanging	PN 10/16 and Class 150 (125)
Pressure range	16 bar (Option: 19.3 bar)

DN80/DN100/DN150 :

G size	Qmax (m³/h)	DN	Flange to flange distance Dim.: L	Rangea-bility	Pressure loss Δpr[1] (mbar)	1 Imp LF & Cyble (m³/Imp)	1 Imp MF (dm³/Imp)	Freq MF at Qmax (Hz)	1 Imp HF (dm³/Imp) (Std. Gears 32/40)	Freq HF at Qmax (Hz)	A	B	C	D	Vc (dm³)	Weight (Kg)
G160	250	80	241	20 to 160	2.73	0.1	8.26	8.41	0.178	390	230	179	409	235	1.78	41
G250	400	100	241	20 to 160	2.63	1	32.6	3.40	0.365	304	333	282	615	235	3.65	56
G400	650	100	241	20 to 160	4.9	1	32.6	5.53	0.365	496	333	282	615	235	3.65	56
G250	400	150[2]	450	20 to 100	0.77	1	48.0	2.31	0.595	187	343	267	610	365	5.4	120
G400	650	150[2]	450	20 to 160	2.03	1	48.0	3.76	0.595	303	343	267	610	365	5.4	120
G650	1000	150[2]	450	20 to 200	4.8	1	48.0	5.79	0.595	467	343	267	610	365	5.4	120

[2] S3-Flow meter

Delta DN150 G650 S3-Flow

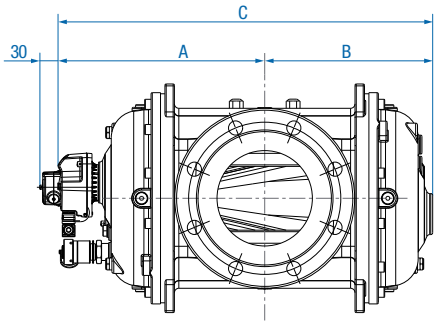

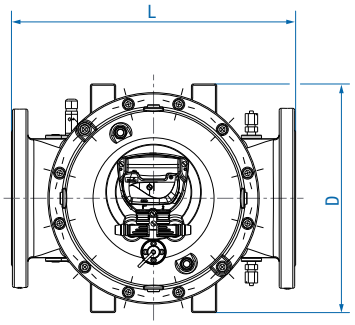

STEEL SERIES

DELTA S1-FLOW

S1-Flow in steel is designed to meet the highest requirement, both in accurate measurement, due to s-flow technology, and high pressure conditions.

Main Characteristics

- Only the front cover must be filled with a lubricant.
- MF is supplied as an option.
- 2 thermowells are supplied as option.
- A by-pass can be installed as an option.
  It enables the gas to flow even if the meter is blocked for any reason.
- An alarm can be remotely sent requesting for maintenance.
- Up to 2 HF are supplied as option.

Technical Features

Flow rate	0.4 m^3/h to 160 m^3/h
G size	G16, G25, G40, G65 and G100
Rangeability	1:20 to 1:200
Nominal diameter	50 (2")
Flanging	PN 10/16 to PN40 Class 150 to Class 600
Pressure range	101.2 bar

DN50 :

G size	Qmax (m^3/h)	DN	Flange to flange distance Dim.: L	Rangea-bility	Pressure loss Δpr[1] (mbar)	1 Imp LF & Cyble (m^3/Imp)	1 Imp MF (dm^3/Imp)	Freq MF at Qmax (Hz)	1 Imp HF (dm^3/Imp) (Std. Gears 32/40)	Freq HF at Qmax (Hz)	A	B	C	D	Vc (dm^3)	Weight (Kg)
G16	25	50	240	20 to 30	0.21	0.1	2.31	3.01	0.0496	140	190	100	290	150	0.49	34
G25	40	50	240	20 to 65	0.44	0.1	2.31	4.81	0.0496	224	190	100	290	150	0.49	34
G40	65	50	240	20 to 100	1.08	0.1	2.31	7.82	0.0496	364	190	100	290	150	0.49	34
G65	100	50	240	20 to 160	1.90	0.1	2.31	12.0	0.0496	560	190	100	290	150	0.49	34
G100	160	50	240	20 to 200	3.88	0.1	2.31	19.3	0.0496	896	190	100	290	150	0.49	34

[1] Δpr: Pressure loss (mbar) with ρ = 0.83Kg/m^3 and at Qmax

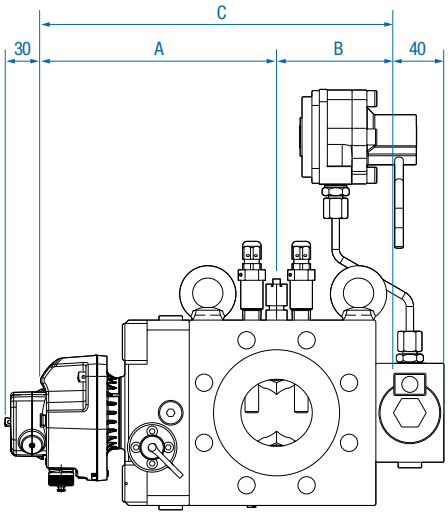

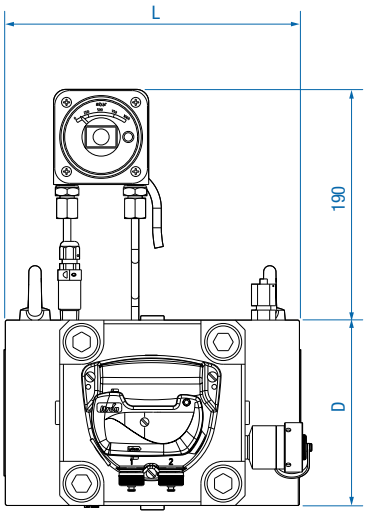

Delta DN50 G100 S1 Flow in steel and equipped with by-pass, extension for the totalizer and cyble sensor

PRESSURE LOSS OF THE DELTA METERS

Calculation of pressure loss: $\Delta p = \Delta p_r \times \frac{\rho n}{0.83} \times (Pb+1) \times \left[\frac{q}{Qmax}\right]^2 \times \left[\frac{273}{(273+Tb)}\right]$

where:

- Δp: Pressure loss in the calculated conditions
- Δpr: Pressure loss in the reference conditions
- ρn: Gas density (kg/m³) at 0° C and 1013 mbar
- Pb: Operating pressure (Bar gauge)
- q: Flow rate (m³/h)
- Qmax: Maximum flow rate (m³/h)
- Tb: Gas temperature (°C).

INSTALLATION

Each meter is delivered with binder plugs for the installed transmitters and oil for the lubrication. Please refer to the instruction manual supplied with the meter.

The advice given therein will ensure optimal use of the Delta meter over the years.

Flat gasket filters
from DN25 to DN150

Delta DN80 G100 with Corus PTZ

Thermowell fitted with sealing holes

Delta DN50 G65 S1-Flow equipped with
extension for the totaliser and by-pass

ACCESSORIES / OPTIONS

Flat gasket-filter:

» Flat gasket-filter, to be fit between flanges DN25 to DN150, High Temperature Resistant and with a level of filtration of 100.

External silicagel cartridge:

» Accessory for maintenance on the installed external silicagel cartridge for extreme conditions.

Pete´s plug®:

» Ideal device for filling lubricant in the cover of the meter while equipment is in service. It must be fitted instead of the tap plug of the cover.
Plugged on the pressure tapping, it can be used to measure the pressure and the temperature of the measured gas.
Connection size: ¼" NPT or ¼" BSP.
Maximum pressure of gas: 20 bar.

Bracket for mounting a volume converter:

» This device permits the Itron Corus PTZ volume converter to be adapted directly onto the meter, or at the most convenient place to the meter to enable the converter index to be easily read.

Thermowells:

» These threaded ¼" NPT thermowells, can be plugged onto the meter. They can be retrofitted on to the standard version (plugged onto the existing pressure tapping), or they can be installed on the versions equipped with extra-tapping. The internal diameter of the thermowell is 7 mm; it enables mounting of most standard temperature probes.

Extension for the totaliser:

» This option allows the possibility to increase the distance between the body of the meter and the index, to facilitate the reading when the meter is covered with ice due to measurement at low temperatures.

By-pass:

» It can be installed as an option on the steel version DN50. It enables the gas to flow even if the meter is blocked for any reason.

Join us in creating a more **resourceful world**.
To learn more visit **itron.com**

While Itron strives to make the content of its marketing materials as timely and accurate as possible, Itron makes no claims, promises, or guarantees about the accuracy, completeness, or adequacy of, and expressly disclaims liability for errors and omissions in, such materials. No warranty of any kind, implied, expressed, or statutory, including but not limited to the warranties of non-infringement of third party rights, title, merchantability, and fitness for a particular purpose, is given with respect to the content of these marketing materials.
© Copyright 2019 Itron. All rights reserved. **GA-Delta-12-EN-07-19**

ITRON GmbH

Hardeckstraße
D-76185 Karlsruhe
Germany

Phone: +49-721 5981 0
Fax: +49-721 5981 189